DC Brushless Blower 50x25mm-B Type





Application:

Portable ventilator

P@Q CURVE(AT RATEDVOLTAGE)

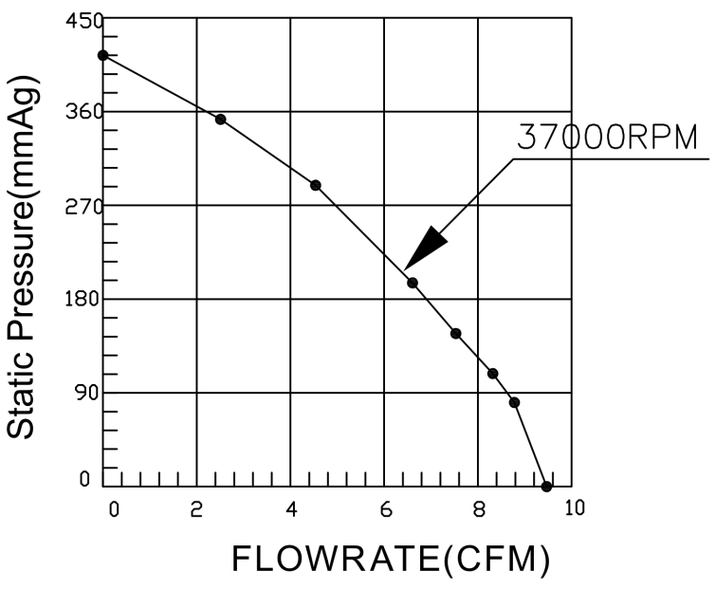

DIMENSIONS DRAWING(unit:mm)

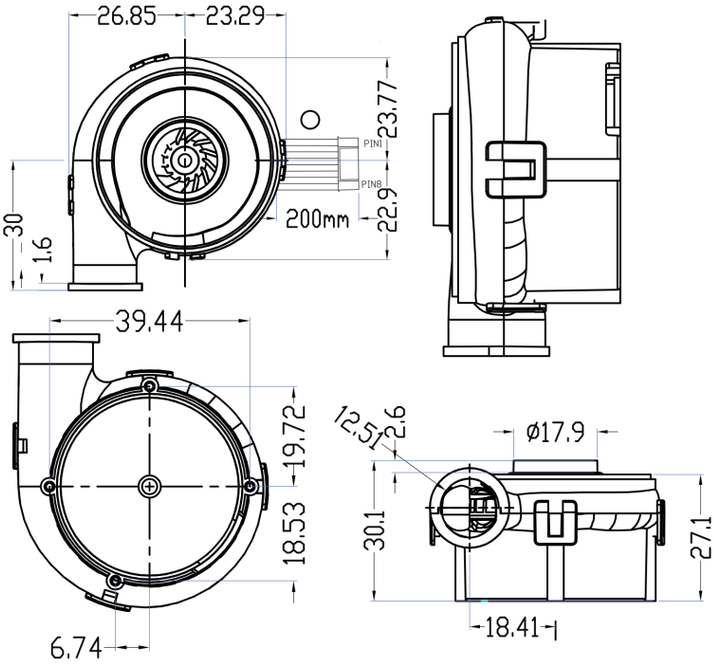

Code Rule

Example DCH12038H12B-A1701

DCH12038H12X-AY

Model No. is DCH12038H12X; Extro P/N code is AY

X means bearing type,can be S(sleeve bearing),can be B(ball bearing),can be Y(HY bearing),can be SU(sleeve with UL),can be BU(ball with UL),can be YU(HY with UL)

Y means special function code,it will be used for a certain parts no. or client.

Model	P/N Code	Rated Voltage	Operating Voltage Range	Rated Current	Rated Input Power	Speed	Maximum Air Flow		Maximum Air Pressure		Noise
PART.NO.	BY	VDC	VDC	Amp	Watt	R.P.M	M³/min	CFM	mmH2O	InH2O	dB-A
HR5025H24B		24	5~30	1.0	24.0	37000	0.269	9.5	412.8	16.25	67.0