HR7015(-SF) 12V

DC AXIAL FAN | TECHNICAL DATASHEET

70x70x15 mm | 12 VDC



Frame Type: Black PBT (UL94V-0)
Impeller: Black PBT (UL94V-0)
Bearing: Two Ball & (Sleeve or Hydraulic Bearing)
Operation Temperature: -10°C~70°C (Ordinary humidity)
Storage Temperature: -40°C~80°C (Ordinary humidity)
Lead wire: (+) Red,(-) Black,(FG/RD)Yellow,(PWM) Blue
Safety: CE approved, RoHS
Ingress of Protection: IP42 or IP55
Unit Weight:45g
Level of error:±10%

ELECTRICAL & PERFORMANCE SPECIFICATIONS

Model	Rated VDC	Operating VDC	Current A	Power W	Speed RPM	Air flow CFM	Air flow m³/min	Pressure mmH2O	Pressure Pa	Noise dBA
HR7015HD1(-SF)	12	7~15	0.25	3.00	5500	35.30	1.00	4.97	48.74	40.35
HR7015MD1(-SF)	12	7~15	0.18	2.16	4500	30.20	0.86	4.27	41.87	35.90
HR7015LD1(-SF)	12	7~15	0.10	1.20	3000	19.53	0.55	1.94	19.02	27.10

AVAILABLE FUNCTIONS

RP	AS	CS	CL	OV	SS	FG	RD/RD/b	LD	PPWM	VPWM	TC	RC
Yes	Yes	Yes			Yes	Yes	Yes		Yes			

Function availability depends on the ordered configuration. Confirm wiring and pinout before use.

PERFORMANCE CURVES

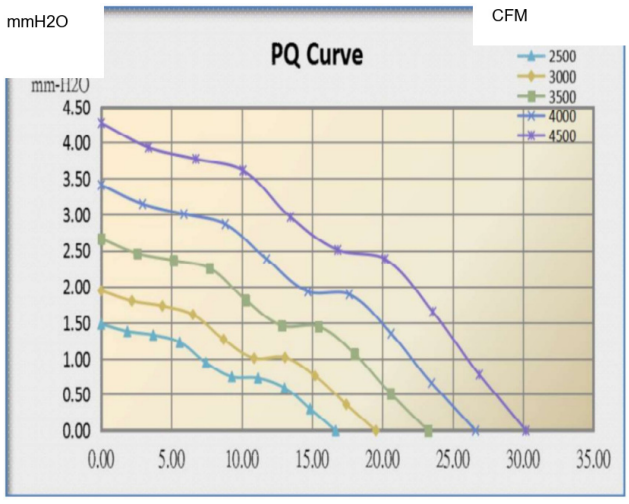

DIMENSIONS (mm)

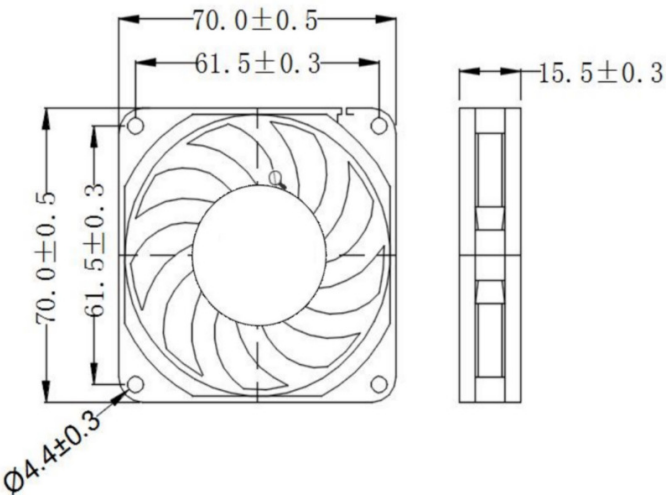

Specifications are subject to change. Contact HERAYS for configuration requirements.