BA

DC Brushless Blower 70x50mm-C Type



Application:

Air cushion blower、Air mold blower

P@Q CURVE(AT RATEDVOLTAGE)

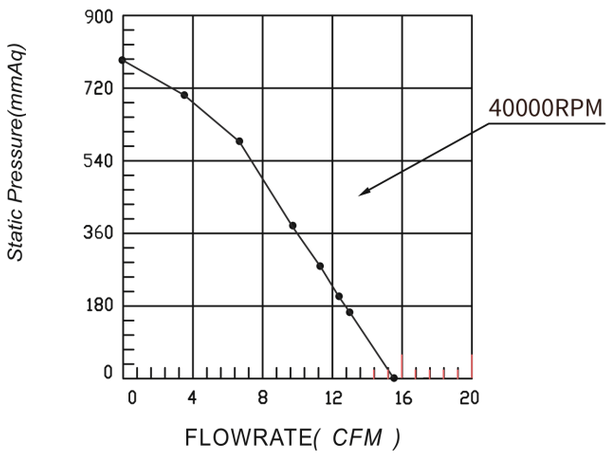

DIMENSIONS DRAWING(unit:mm)

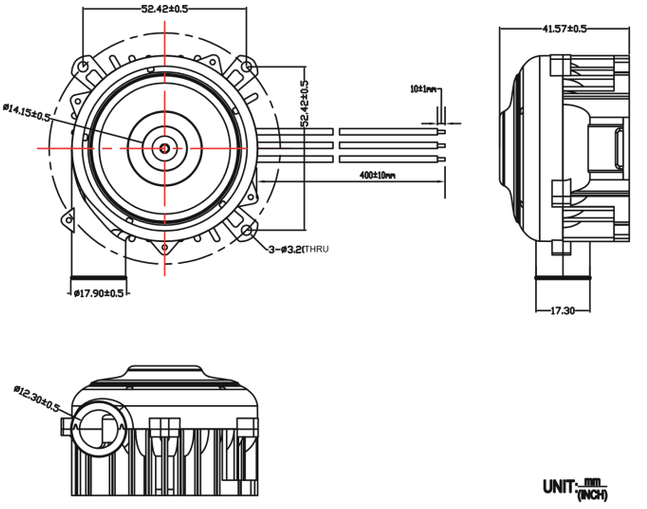

Code Rule

Example DCH12038H12B-DAH1701
DCH12038H12X-AY

Model No. is DCH12038H12X; Extro P/N code is AY
X means bearing type,can be S(sleeve bearing),can be B(ball bearing),can be Y(HY bearing),can be SU(sleeve with UL),can be BU(ball with UL),can be YU(HY with UL)
Y means special function code,it will be used for a certain parts no. or client.

Model	P/N Code	Rated Voltage	Operationg Voltage Range	Rated Current	Rated Input Power	Speed	Maximum Air Flow		Maximum Air Pressure		Noise
PART.NO.	CY	VDC	VDC	Amp	Watt	R.P.M	M³/min	CFM	mmH2O	InH2O	dB-A
HR7050H12B		12	9~13.5	5.7	68.4	40000	0.44	15.5	790.5	31.12	73.8