BA

DC Brushless Blower 80x60mm-E-Type



Application:

Air cushion blower、Air mold blower

P@Q CURVE(AT RATEDVOLTAGE)

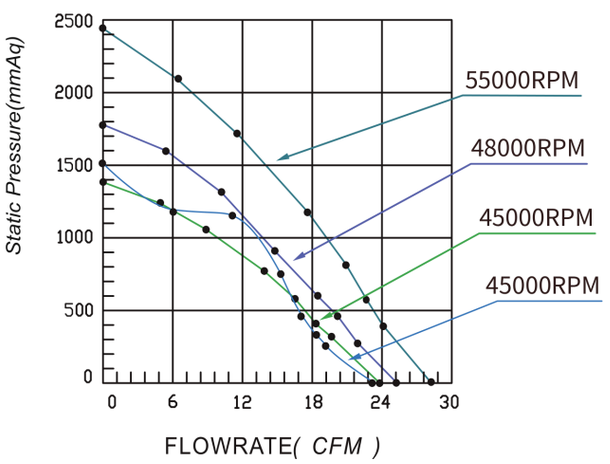

DIMENSIONS DRAWING(unit:mm)

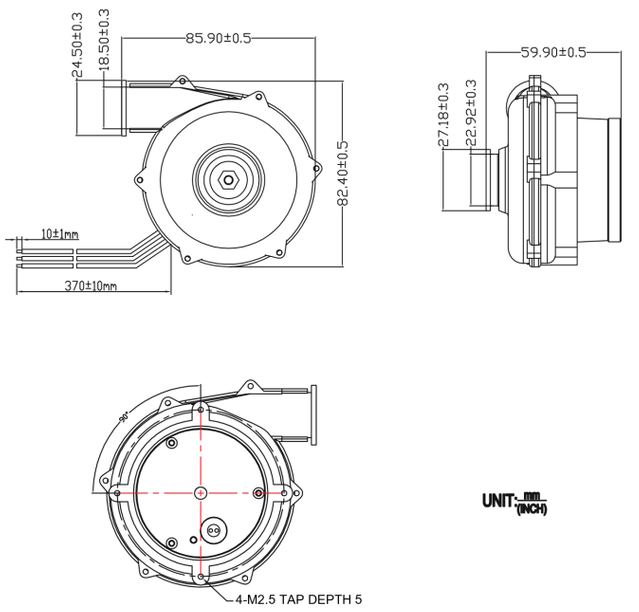

Code Rule

Example DCH12038H12B-DAH1701
DCH12038H12X-AY

Model No. is DCH12038H12X; Extro P/N code is AY
X means bearing type,can be S(sleeve bearing),can be B(ball bearing),can be Y(HY bearing),can be SU(sleeve with UL),can be BU(ball with UL),can be YU(HY with UL)
Y means special function code,it will be used for a certain parts no. or client.

Model	P/N Code	Rated Voltage	Operationg Voltage Range	Rated Current	Rated Input Power	Speed	Maximum Air Flow		Maximum Air Pressure		Noise
PART.NO.	EY	VDC	VDC	Amp	Watt	R.P.M	M³/min	CFM	mmH2O	InH2O	dB-A
HR8060H24B		24	19~26.5	7.7	184.8	48000	0.71	25.1	1822.5	74.42	88.3
HR8060H24B-E-25KPA		24	19~26.5	11.7	280.8	55000	0.79	28.1	2419.0	95.1	92.2
HR8060H01B		110(AC)	90~130(AC)	1.7	155	45000	0.66	23.5	1364.6	53.72	87.7
HR8060H02B		220(AC)	180~240(AC)	0.9	138	45000	0.65	23.1	1503.2	59.18	88.7