DC Brushless Blower 80x77x60mm-A Type



Application:

P@Q CURVE(AT RATEDVOLTAGE)

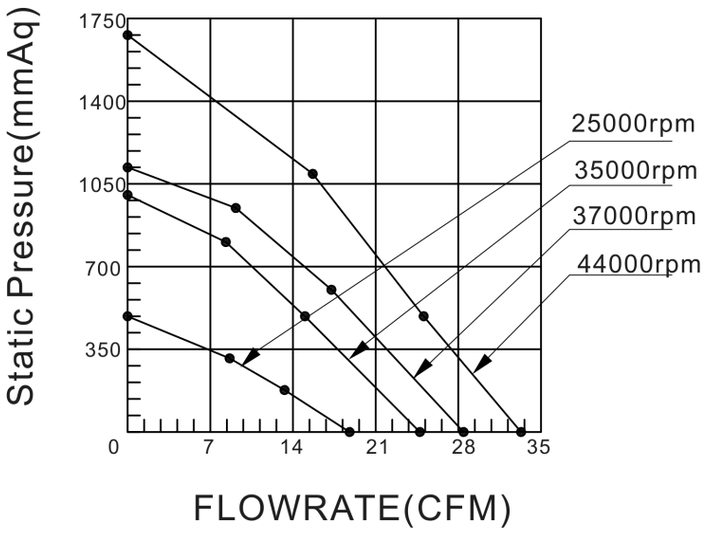

DIMENSIONS DRAWING(unit:mm)

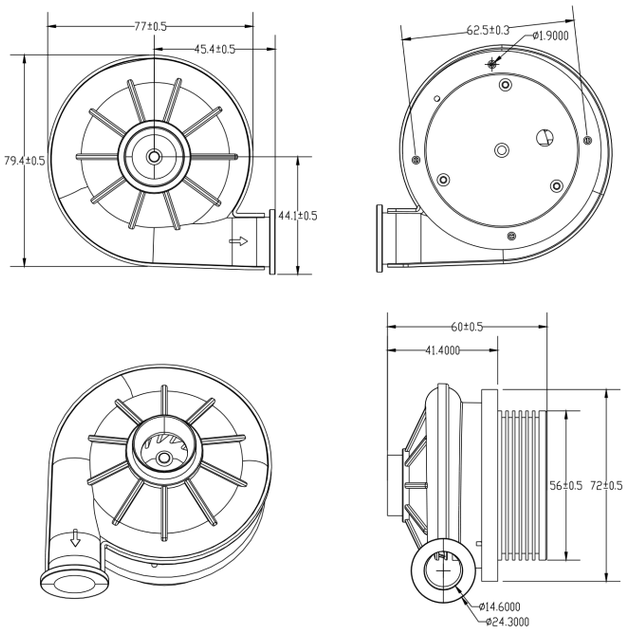

Code Rule

Example DCH12038H12B-A1701
DCH12038H12X-AY

Model No. is DCH12038H12X; Extro P/N code is AY
X means bearing type,can be S(sleeve bearing),can be B(ball bearing),can be Y(HY bearing),can be SU(sleeve with UL),can be BU(ball with UL),can be YU(HY with UL)
Y means special function code,it will be used for a certain parts no. or client.

Model	P/N Code	Rated Voltage	Operating Voltage Range	Rated Current	Rated Input Power	Speed	Maximum Air Flow		Maximum Air Pressure		Noise
PART.NO.		VDC	VDC	Amp	Watt	R.P.M	M³/min	CFM	mmH2O	InH2O	dB-A
HR8060L24B	AY	24	18~26.5	1.85	44.4	25000	0.515	18.4	497.8	19.6	68.40
HR8060M24B		24	18~26.5	4.3	103.2	35000	0.719	25.4	1009.5	39.7	70.90
HR8060M24B-02		24	18~26.5	4.3	129.6	37000	0.795	28.1	1119.5	44.1	70.90
HR8060H24B		24	18~26.5	8.5	204	44000	0.957	33.8	1681.3	66.2	84.3